REV.	DESCRIPTION	DATE
A	Add ccd to flange top dist.	2/26/2008
B	Add WEE symbol, new logo & focal plane	10/15/2012

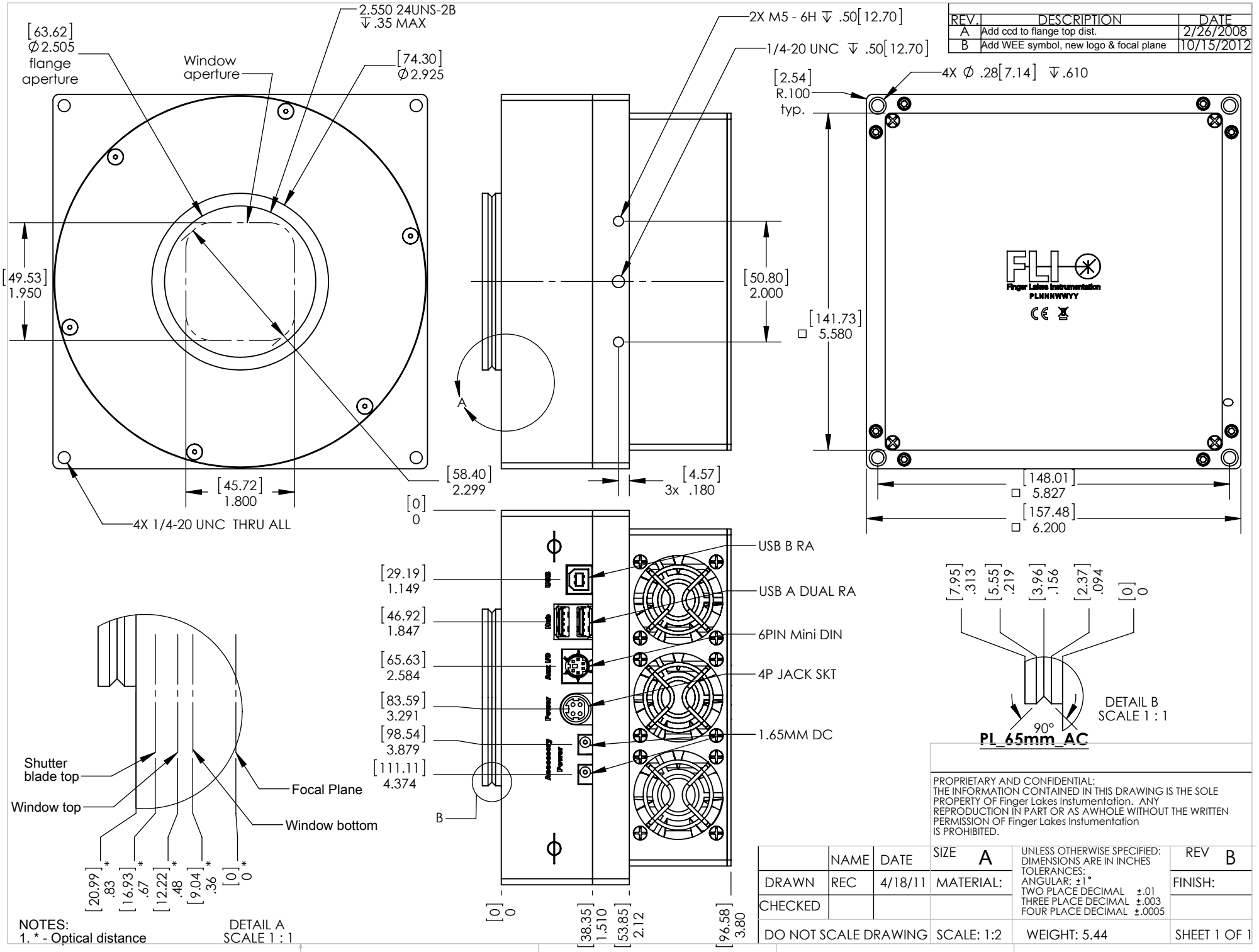

NOTES:
1. * - Optical distance

PROPRIETARY AND CONFIDENTIAL:
THE INFORMATION CONTAINED IN THIS DRAWING IS THE SOLE PROPERTY OF Finger Lakes Instumentation. ANY REPRODUCTION IN PART OR AS AWHOLE WITHOUT THE WRITTEN PERMISSION OF Finger Lakes Instumentation IS PROHIBITED.

	NAME	DATE	SIZE A	UNLESS OTHERWISE SPECIFIED: DIMENSIONS ARE IN INCHES TOLERANCES: ANGULAR: ±1° TWO PLACE DECIMAL ±.01 THREE PLACE DECIMAL ±.003 FOUR PLACE DECIMAL ±.0005	REV B
DRAWN	REC	4/18/11	MATERIAL:		FINISH:
CHECKED					
DO NOT SCALE DRAWING			SCALE: 1:2	WEIGHT: 5.44	SHEET 1 OF 1

5 4 3 2 1